PROCO

The Expansion Joint and Check Valve People

Rubber Expansion Joint Series 271

Proco Style 271 Rubber Joints

Proco Style 271 Rubber Expansion Joints are designed for piping systems to absorb pipe movements, relieve stress, reduce system noise/vibration, compensate for misalignment/offset and to protect rotating mechanical equipment against start-up surge forces.

The Style 271 rubber expansion joint is a single super wide flowing arch design. The wide flowing arch is self-cleaning which makes it a perfect choice for slurries, thus eliminating the need for a filled arch design.

The Style 271 can easily replace and interchange with hand built narrow/wide filled arch, molded wide arch and spherical type expansion joints. Proco's Style 271 has been successfully installed in tough demanding applications such as: Chemical/Petrochemical, Marine, Power Generation, Pulp/Paper, Steel Mills and Water/Wastewater Treatment.

Features and Benefits:

Absorbs Directional Movement

Thermal movements appear in any rigid pipe system due to temperature changes. The Style 271 super low profile wide arch allows for axial compression or axial extension, lateral deflection as well as angular and torsional movements. (Note: Rated movements in this publication are based on one plane movements. Multiple movement conditions are based on a multiple movement calculation. Contact Proco for information when designing multiple pipe movements.)

Less Turbulence or Material Entrapment

The Style 271 expansion joints are manufactured with the integral rubber flange joining the body at a true 90º angle. This ensures the product will install snug against the mating pipe flange free of voids creating less turbulence in the pipe system. The Proco 271 rubber joint also has a self-flushing arch which eliminates media buildup and the need for a filled arch spool joint resulting in greater movement capability and lower spring rates.

Absorbs Vibration, Noise and Shock

The Proco Style 271 rubber expansion joints effectively dampen and insulate downstream piping against the transmission of noise and vibration generated by mechanical equipment. Noise and vibrations caused by equipment can cause stress in pipe, pipe guides, anchors and other equipment downstream. The Style 271 expansion joints will help relieve noise and vibration occurrences in a pipe system. Water hammer and pumping impulses can also cause strain, stress or shock to a piping system. Install the Style 271 to help compensate for these system pressure spikes.

Compensates for Misalignment

Rubber expansion joints are commonly used by contractors and plant personnel to allow for slight pipe misalignment during installation of new piping and or replacement applications. (Although rubber expansion joints can be made with permanent offsets, it is suggested that piping misalignments be limited to no more than 1/2 the rated catalog movement. Contact Proco for resultant movement capability.)

Wide Service Range and Less Weight

Engineered to operate up to 200 PSIG (nominal size dependent) or up to 250ºF (elastomer dependent), the Series 271 can be specified for a wide range of piping system requirements. The Series 271 rubber expansion joints are constructed in various elastomers with rubber impregnated polyester tire cord cross wrapped in bias ply construction. This construction eliminates the need for internal wire reinforcement (while still providing adequate pressure and vacuum ratings) making the Series 271 less weight than a typical spool or spherical expansion joint option. This lightweight design installs easily and costs less to ship.

Material Identification

All 271 expansion joints are strip branded with cure dates and elastomer designations. All Neoprene Tube/Neoprene Cover (NN) and Nitrile Tube/Neoprene Cover (NP) elastomer designated joints meet the Coast Guard Requirements and conform to ASTM F 1123-87.

Large Inventory

Proco Products, Inc. maintains one of the largest inventories of rubber expansion joints in the world.
Please contact us for price and availability.

Protecting Piping and Equipment Systems from Stress/Motion

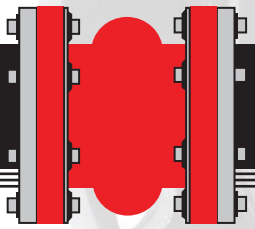

Information subject to change without notice.

Table 1: Available Materials * Temperatures

For Specific Chemical Compatibilities, See: **PROCO "Chemical To Elastomer Guide"**

Proco Style Number	Cover [1,2] Elastomer	Tube [1,2] Elastomer	Maximum Operating Temp. ºF (ºC)	Branding Label Color	F.S.A. Material Class
271/BB	Chlorobutyl	Chlorobutyl	250º (121º)	Black	STD. III
271/EE	EPDM	EPDM [5]	250º (121º)	Red	STD. III
271/EQ	EPDM	FDA-EPDM	250º (121º)	Red[3]	STD. II
271/NH	Neoprene	CSM	212º (100º)	Green	STD. II
271/NN	Neoprene	Neoprene [5]	225º (107º)	Blue	STD. II
271/NF	Neoprene	FDA-Neoprene	225º (107º)	Blue[3]	STD. II
271/NP	Neoprene	Nitrile	212º (100º)	Yellow	STD. II
271/NR	Neoprene	Natural Rubber	180º (82º)	White	STD. I

Notes: All Products are reinforced with Polyester Tire Cord

1. *Expansion Joint "Cover" can be coated with CSM UV Resistant Coating.*
2. *All NN & NP elastomer designated joints meet the Coast Guard Requirements and conform to ASTM F 1123-87 and are marked accordingly.*
3. *Branding Label will be marked as "Food Grade".*
4. *All elastomers above are not intended for steam service*
5. *Elastomers are in accordance with NSF/ANSI 372, File MH47689 Und. Lab. Classified.*

Style 271 Performance Data

Table 2: Sizes • Movements • Design Pressures • Weights

Expansion Joint Size Nom. I.D. Inch / (mm)		Neutral Length Inch / (mm)		271 Movement Capability: From Neutral Position (Non-Concurrent)					Operating Conditions [1]			Weights lbs / (kgs) [2]		
				Axial Compression Inch / (mm)	Axial Extension Inch / (mm)	Lateral Deflection Inch / (mm)	Angular Deflection [3] (Degrees)	Torsional Rotation [4] (Degrees)	Thrust Factor [5] In2 / (cm2)	Positive PSIG (Bar)	Vacuum Inches of Hg / (mm of Hg)[6]	Expansion Joint	Retaining Ring Set	Limit Rod Assembly [7]
2	(50)	6	152	1.0 (25)	0.5 (13)	0.5 (13)	25	2	7.94 (51)	200 (14)	26 (660)	3.5 (1.6)	4.0 (1.8)	2.8 (1.3)
		7	178											
		8	203											
		9	229											
		10	254											
		12	305											
2.5	(65)	6	152	1.0 (25)	0.5 (13)	0.5 (13)	20	2	10.63 (69)	200 (14)	26 (660)	3 (1.3)	4.5 (2.0)	2.8 (1.3)
		7	178											
		8	203											
		9	229											
		10	254											
		12	305											
3	(80)	6	152	1.0 (25)	0.5 (13)	0.5 (13)	17	2	13.72 (89)	200 (14)	26 (660)	3 (1.4)	5.5 (2.5)	2.8 (1.3)
		7	178											
		8	203											
		9	229											
		10	254											
		12	305											
4	(100)	6	152	1.0 (25)	0.5 (13)	0.5 (13)	13	2	21.06 (136)	200 (14)	26 (660)	4.0 (2.0)	8.0 (3.6)	2.8 (1.3)
		7	178											
		8	203											
		9	229											
		10	254											
		12	305											
5	(125)	6	152	1.0 (25)	0.5 (13)	0.5 (13)	10	2	29.98 (193)	190 (13)	26 (660)	6.0 (2.6)	8.5 (3.9)	4.0 (1.8)
		7	178											
		8	203											
		9	229											
		10	254											
		12	305											
6	(150)	6	152	1.0 (25)	0.5 (13)	0.5 (13)	8	2	40.47 (261)	190 (13)	26 (660)	6.0 (2.8)	9.5 (4.3)	4.0 (1.8)
		7	178											
		8	203											
		9	229											
		10	254											
		12	305											

See Notes Page 4

Style 271 Performance Data

Table 2: Sizes • Movements • Design Pressures • Weights

Expansion Joint Size Nom. I.D. Inch / (mm)		Neutral Length Inch / (mm)		271 Movement Capability: From Neutral Position (Non-Concurrent)					Operating Conditions [1]			Weights lbs / (kgs) [2]		
				Axial Compression Inch / (mm)	Axial Extension Inch / (mm)	Lateral Deflection Inch / (mm)	Angular Deflection [3] (Degrees)	Torsional Rotation [4] (Degrees)	Thrust Factor [5] In2 / (cm2)	Positive PSIG (Bar)	Vacuum Inches of Hg / (mm of Hg)[6]	Expansion Joint	Retaining Ring Set	Limit Rod Assembly [7]
8	(200)	6 7 8 9 10 12	152 178 203 229 254 305	1.0 (25)	0.5 (13)	0.5 (13)	6	2	66.15 (427)	190 (13)	26 (660)	9.0 (4.1)	14.5 (6.6)	8.0 (3.6)
10	(250)	8 9 10 12	203 229 254 305	1.2 (30)	0.5 (13)	0.5 (13)	5	2	105.27 (679)	190 (13)	26 (660)	18.0 (8.1)	17.0 (7.7)	10.0 (4.5)
12	(300)	8 9 10 12	203 229 254 305	1.2 (30)	0.5 (13)	0.5 (13)	4	2	144.77 (934)	190 (13)	26 (660)	20.0 (9.1)	24.5 (11.1)	10.0 (4.5)
14	(350)	8 9 10 12	203 229 254 305	1.2 (30)	0.5 (13)	0.5 (13)	3	2	190.55 (1229)	130 (9)	26 (660)	23.0 (10.3)	27.0 (12.2)	12.0 (5.5)
16	(400)	8 9 10 12	203 229 254 305	1.2 (30)	0.5 (13)	0.5 (13)	3	2	242.61 (1565)	115 (8)	26 (660)	27.0 (12.0)	33.5 (15.2)	15.0 (6.8)
18	(450)	8 10 12	203 254 305	1.2 (30)	0.5 (13)	0.5 (13)	3	2	300.95 (1942)	115 (8)	26 (660)	30.0 (13.4)	34.0 (15.4)	16.0 (7.3)
20	(500)	8 10 12	203 254 305	1.2 (30)	0.5 (13)	0.5 (13)	2	2	365.57 (2359)	115 (8)	26 (660)	36.0 (16.3)	38.0 (17.2)	16.0 (7.3)
22	(550)	10 12	254 305	1.2 (30)	0.5 (13)	0.5 (13)	2	2	436.47 (2816)	110 (8)	26 (660)	41.0 (18.7)	44.0 (20)	19.0 (9)
24	(600)	10 12	254 305	1.2 (30)	0.5 (13)	0.5 (13)	2	2	513.65 (3314)	110 (8)	26 (660)	44.5 (20.2)	48.0 (21.8)	20.0 (9.1)
26	(650)	10 12	254 305	1.2 (30)	0.5 (13)	0.5 (13)	2	2	597.12 (3853)	90 (6)	26 (660)	48.0 (21.8)	51.0 (23.1)	20.0 (9.1)
28	(700)	10 12	254 305	1.2 (30)	0.5 (13)	0.5 (13)	2	2	686.86 (4432)	90 (6)	26 (660)	53.0 (23.9)	55.0 (24.9)	28.0 (12.7)
30	(750)	10 12	254 305	1.2 (30)	0.5 (13)	0.5 (13)	1	2	782.88 (5051)	90 (6)	18 (450)	60.0 (27.2)	63.0 (30.8)	29.5 (13.4)

Table 2: Sizes • Movements • Design Pressures • Weights

Expansion Joint Size Nom. I.D. Inch / (mm)		Neutral Length Inch / (mm)		271 Movement Capability: [1] From Neutral Position (Non-Concurrent)					Operating Conditions [2]			Weights lbs / (kgs) [3]		
				Axial Compression Inch / (mm)	Axial Extension Inch / (mm)	Lateral Deflection Inch / (mm)	Angular Deflection [4] (Degrees)	Torsional Rotation [5] (Degrees)	Thrust Factor [6] In2 / (cm2)	Positive PSIG (Bar)	Vacuum Inches of Hg / (mm of Hg) [7]	Expansion Joint	Retaining Ring Set	Limit Rod Assembly [8]
32	(800)	10 12	254 305	1.2 (30)	0.5 (13)	0.5 (13)	1	2	885.18 (5711)	90 (6)	18 (450)	65.0 (29.3)	68.0 (30.8)	29.5 (13.4)
34	(850)	10 12	254 305	1.2 (30)	0.5 (13)	0.5 (13)	1	2	993.76 (6412)	90 (6)	18 (450)	72.0 (32.8)	72.0 (32.7)	43.0 (19.5)
36	(900)	10 12	254 305	1.2 (30)	0.5 (13)	0.5 (13)	1	1	1108.62 (7153)	90 (6)	18 (450)	79.0 (36)	76.0 (34.5)	43.0 (19.5)
38	(950)	10 12	254 305	1.2 (30)	0.5 (13)	0.5 (13)	1	1	1229.76 (7934)	90 (6)	18 (450)	85.5 (38.8)	86.0 (39.0)	43.0 (19.5)
40	(1000)	10 12	254 305	1.2 (30)	0.5 (13)	0.5 (13)	1	1	1357.18 (8757)	90 (6)	18 (450)	91.0 (41.3)	100.0 (45.4)	43.0 (19.5)
42	(1050)	12 14	305 356	1.4 (36)	0.5 (13)	0.5 (13)	1	1	1507.35 (9725)	80 (5.5)	15 (380)	112.0 (50.8)	100.0 (45.4)	44.0 (20)
44	(1100)	12 14	305 356	1.4 (36)	0.5 (13)	0.5 (13)	1	1	1648.09 (10633)	80 (5.5)	15 (380)	123.0 (55.6)	104.0 (47.2)	44.0 (20)
46	(1150)	12 14	305 356	1.4 (36)	0.5 (13)	0.5 (13)	1	1	1795.10 (11582)	80 (5.5)	15 (380)	130.0 (58.8)	127.0 (57.6)	44.0 (20)
48	(1200)	12 14	305 356	1.4 (36)	0.5 (13)	0.5 (13)	1	1	1948.40 (12571)	80 (5.5)	15 (380)	139.0 (62.9)	132.0 (59.9)	44.0 (20)

NOTES:

1. *Concurrent Movements - Concurrent movements are developed when two or more movements in a pipe system occur at the same time. If multiple movements exceed single arch design there may be a need for additional arches. To perform calculation for concurrent movement when a pipe system design has more than one movement, please use the following formula:*

$$\frac{\text{Actual Axial Compression}}{\text{Rated Axial Compression}} + \frac{\text{Actual Axial Extension}}{\text{Rated Axial Extension}} + \frac{\text{Actual Lateral (X)}}{\text{Rated Lateral (X)}} + \frac{\text{Actual Lateral (Y)}}{\text{Rated Lateral (Y)}} = / < 1$$

Calculation must be equal to or less than 1 for expansion joint to operate within concurrent movement capability.

2. *Pressure rating is based on 170° F operating temperature with a 4:1 safety factor. At higher temperatures, the pressure rating is reduced slightly. Hydrostatic testing at 1.5 times rated maximum catalogue pressure or design working pressure of pipe system for 10 minutes is available upon request.*
3. *Weights are approximate and vary due to length.*
4. *The degree of angular movement is based on the maximum rated extension.*
5. *Torsional movement is expressed when the expansion joint is at neutral length.*
6. *Calculation of Thrust (Thrust Factor). When expansion joints are installed in the pipeline, the static portion of the thrust is calculated as a product of the area of the I.D. of the arch of the expansion joint times the maximum pressure (design, test or surge) that will occur in the line. The result is a force expressed in pounds.*
   Take Design, surge or test pressure X thrust factor to calculate end thrust.

"Effective Area"

Thrust Factor=

$$T = \frac{\pi}{4}(D)^2, (P)$$

T= Thrust
P= PSI (Design, Test or Surge)
D= Arch I.D.

7. *Parts listed at 26" Hg / 660 mm Hg vacuum have a design rating of 30" Hg / 762 mm Hg (full vacuum). Vacuum rating is based on neutral installed length, without external load. Products should not be installed "extended" on vacuum applications.*
8. *Limit rod unit weight consists of one rod with washers, nuts and two limit rod plates. Multiply number of limit rods needed for the application (as specified in the Fluid Sealing Association's Technical Handbook, 7.3 Edition or table 4 in this manual) to determine correct weights.*

Style 271 Drilling Chart

Table 3		Standard Drilling for PROCO Rubber Expansion Joints							Thickness of Materials for PROCO Rubber Expansion Joints								Control Unit Plate Detail			
Nominal Pipe Size Expansion Joint I.D. Inch /(mm)		Flange Dimensions [2]							Material Thickness [1] for Bolt Length Requirements											
		Flange O.D. Inch / (mm)		Bolt Circle Inch / (mm)		Number Of Holes	Size Of Holes Inch / (mm)		Retaining Rings Thickness Inch / (mm)		Rubber Flange Thickness Inch / (mm)		Adjacent [3] Mating Flange Thickness	Max. Control [4] Rod Plate Thickness Inch / (mm)		Control Rod [6] Plate O.D. Inch / (mm)		Maximum [7] Rod Diameter Inch / (mm)	
2	(50)	6.00	(152.40)	4.75	(120.65)	4	0.750	(19.05)	0.375	(9.53)	0.472	(11.99)	CUSTOMER TO SPECIFY MATING FLANGE THICKNESS	0.375	(9.53)	10.125	(257.2)	0.625	(15.9)
2.5	(65)	7.00	(177.80)	5.50	(139.70)	4	0.750	(19.05)	0.375	(9.53)	0.472	(11.99)		0.375	(9.53)	11.125	(282.6)	0.625	(15.9)
3	(80)	7.50	(190.50)	6.00	(152.40)	4	0.750	(19.05)	0.375	(9.53)	0.472	(11.99)		0.375	(9.53)	11.625	(295.3)	0.625	(15.9)
4	(100)	9.00	(228.60)	7.50	(190.50)	8	0.750	(19.05)	0.375	(9.53)	0.472	(11.99)		0.375	(9.53)	13.125	(333.4)	0.625	(15.9)
5	(125)	10.00	(254.00)	8.50	(215.90)	8	0.875	(22.23)	0.375	(9.53)	0.551	(14.00)		0.500	(12.70)	14.125	(358.8)	0.625	(15.9)
6	(150)	11.00	(279.40)	9.50	(241.30)	8	0.875	(22.23)	0.375	(9.53)	0.551	(14.00)		0.500	(12.70)	15.125	(384.2)	0.625	(15.9)
8	(200)	13.50	(342.90)	11.75	(298.45)	8	0.875	(22.23)	0.375	(9.53)	0.630	(16.00)		0.750	(19.05)	19.125	(485.8)	1.000	(25.4)
10	(250)	16.00	(406.40)	14.25	(361.95)	12	1.000	(25.40)	0.375	(9.53)	0.630	(16.00)		0.750	(19.05)	21.625	(549.3)	1.000	(25.4)
12	(300)	19.00	(482.60)	17.00	(431.80)	12	1.000	(25.40)	0.375	(9.53)	0.748	(19.00)		0.750	(19.05)	24.625	(625.5)	1.000	(25.4)
14	(350)	21.00	(533.40)	18.75	(476.25)	12	1.125	(28.58)	0.375	(9.53)	0.866	(22.00)		0.750	(19.05)	26.625	(676.3)	1.000	(25.4)
16	(400)	23.50	(596.90)	21.25	(539.75)	16	1.125	(28.58)	0.375	(9.53)	0.866	(22.00)		0.750	(19.05)	30.125	(765.2)	1.250	(31.8)
18	(450)	25.00	(635.00)	22.75	(577.85)	16	1.250	(31.75)	0.375	(9.53)	0.866	(22.00)		0.750	(19.05)	31.625	(803.3)	1.250	(31.8)
20	(500)	27.50	(698.50)	25.00	(635.00)	20	1.250	(31.75)	0.375	(9.53)	0.984	(24.99)		0.750	(19.05)	34.125	(866.8)	1.250	(31.8)
22	(550)	29.50	(749.30)	27.25	(692.15)	20	1.375	(34.93)	0.375	(9.53)	0.984	(24.99)		1.000	(25.40)	36.125	(917.6)	1.250	(31.8)
24	(600)	32.00	(812.80)	29.50	(749.30)	20	1.375	(34.93)	0.375	(9.53)	0.984	(24.99)		1.000	(25.40)	38.625	(981.1)	1.250	(31.8)
26	(650)	34.25	(869.95)	31.75	(806.32)	24	1.375	(34.93)	0.375	(9.53)	0.984	(24.99)		1.000	(25.40)	40.875	(1038.2)	1.250	(31.8)
28	(700)	36.50	(927.10)	34.00	(863.60)	28	1.375	(34.93)	0.375	(9.53)	0.984	(24.99)		1.250	(31.75)	44.125	(1120.8)	1.500	(38.1)
30	(750)	38.75	(984.25)	36.00	(914.40)	28	1.375	(34.93)	0.375	(9.53)	0.984	(24.99)		1.250	(31.75)	46.375	(1177.9)	1.500	(38.1)
32	(800)	41.75	(1060.45)	38.50	(977.90)	28	1.625	(41.28)	0.375	(9.53)	0.984	(24.99)		1.250	(31.75)	49.375	(1254.1)	1.500	(38.1)
34	(850)	43.75	(1111.25)	40.50	(1028.70)	32	1.625	(41.28)	0.375	(9.53)	0.984	(24.99)		1.500	(38.10)	52.375	(1330.3)	1.750	(44.5)
36	(900)	46.00	(1168.40)	42.75	(1085.85)	32	1.625	(41.28)	0.375	(9.53)	0.984	(24.99)		1.500	(38.10)	54.625	(1387.5)	1.750	(44.5)
38	(950)	48.75	(1238.25)	45.25	(1149.35)	32	1.625	(41.28)	0.375	(9.53)	0.984	(24.99)		1.500	(38.10)	57.375	(1457.3)	1.750	(44.5)
40	(1000)	50.75	(1289.05)	47.25	(1200.15)	36	1.625	(41.28)	0.375	(9.53)	0.984	(24.99)		1.500	(38.10)	58.375	(1482.7)	1.750	(44.5)
42	(1050)	53.00	(1346.20)	49.50	(1257.30)	36	1.625	(41.28)	0.375	(9.53)	1.181	(30.00)		1.500	(38.10)	61.625	(1565.3)	1.750	(44.5)
44	(1100)	55.25	(1403.35)	51.75	(1314.45)	40	1.625	(41.28)	0.375	(9.53)	1.181	(30.00)		1.500	(38.10)	63.875	(1622.4)	1.750	(44.5)
46	(1150)	57.25	(1454.15)	53.75	(1365.25)	40	1.625	(41.28)	0.375	(9.53)	1.181	(30.00)		1.500	(38.10)	65.875	(1673.2)	1.750	(44.5)
48	(1200)	59.50	(1511.30)	56.00	(1422.40)	44	1.625	(41.28)	0.375	(9.53)	1.181	(30.00)		1.500	(38.10)	68.125	(1730.4)	1.750	(44.5)

Metric Conversion Formula: Nominal I.D.: in. x 25 = mm; Dimensions/Thickness': in. x 25.4 = mm.

Notes:

1. *Limit/Control Rod length is determined by neutral length of rubber expansion joint, rated extension, control rod plate thickness, mating flange thickness and number of nuts. Consult PROCO for rod lengths.*
2. *Flange Dimensions shown are in accordance with ANSI B16.1 and ANSI B16.5 Class 125/150, AWWA C-207-07, Tbl 2 and 3 - Class D, Table 4 - Class E. Hole size shown is 1/8" larger than AWWA Standard.*
3. *Adjacent mating flange thickness is required to determine overall rod length and compression sleeve length (if required).*
4. *Plate thickness is based on a maximum width PROCO would use to design a Limit/Control Rod plate.*
5. *Flat Washers required at ring splits and are by others.*
6. *Control rod plate O.D. installed dimension is based on a maximum O.D. Proco would supply.*
7. *Control rod diameter is based on a maximum diameter Proco would use to design a control rod.*

A - Retaining Ring Thickness.
B - Rubber Flange Thickness.
C - Adjacent Mating Flange Thickness (By Others).
D - Control Unit Plate Thickness.
E - Double Nut Thickness is determined by Control Rod Diameter.
F - Control Rod Bolt Length is determined by A through E + OAL [1].
G - Control Rod Control Rod Plate O.D.
H - Maximum Rod Diameter

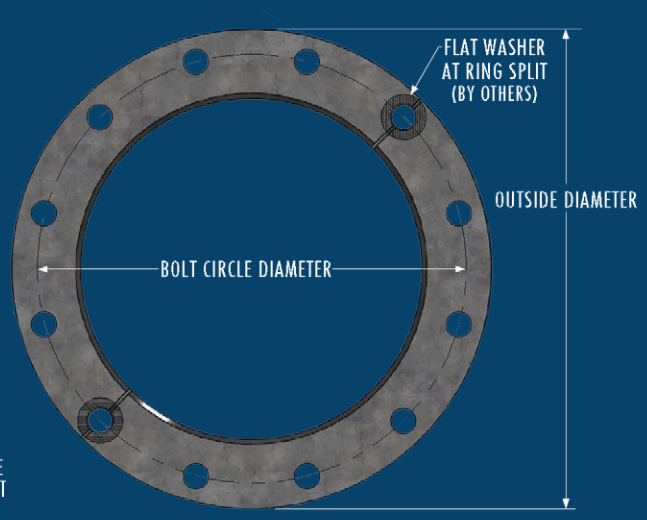

Figure 1

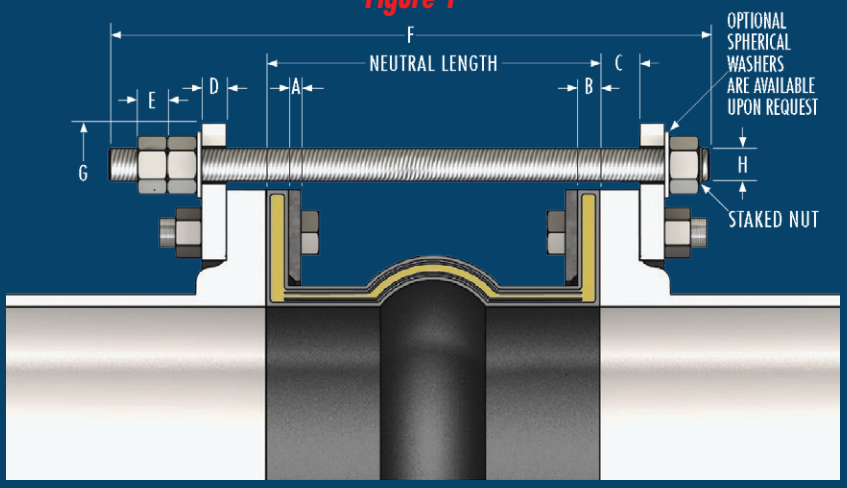

Figure 2

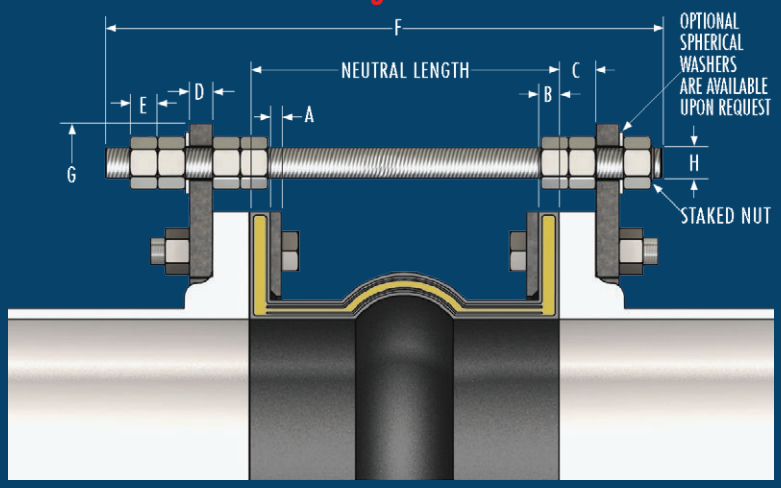

Figure 3

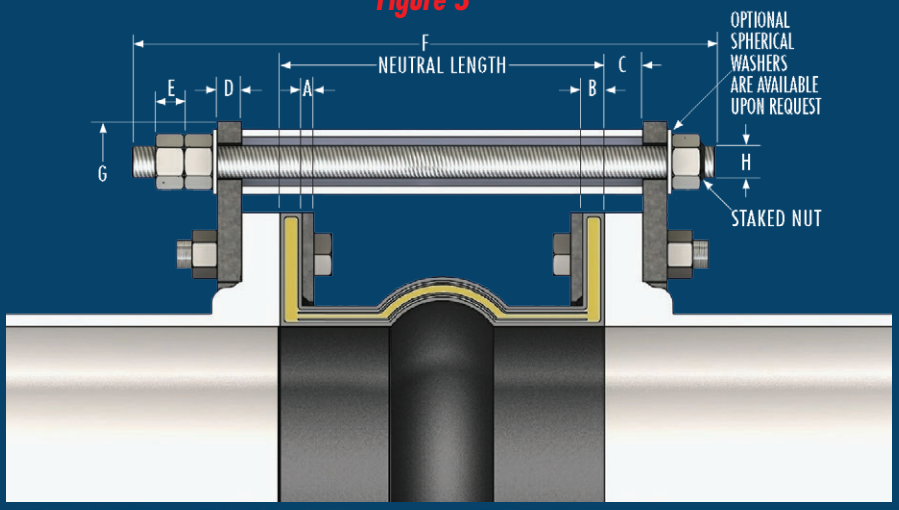

Limit Rods, Control Rods & Compression Sleeves

Use of Control Units with Rubber Expansion Joints

Definition

A control unit assembly is a system of two or more control rod units (limit rods, tie rods or compression sleeves) placed across an expansion joint from flange to flange to minimize possible damage caused by excessive motion of a pipeline. The control unit assemblies can be set at the maximum allowable expansion and/or contraction of the rubber expansion joint. When used in this manner, control units are an additional safety factor and can minimize possible damage to adjacent equipment.

Rubber expansion joints should be installed between two fixed anchor points in a piping system. The pipe system must be rigidly anchored on both sides of the expansion joint to control expansion or contraction of the line. Piping anchors must be capable of withstanding the line thrusts generated by internal pressure or wide temperature fluctuations.

When proper anchoring cannot be provided, **CONTROL UNITS ARE REQUIRED.** For un-anchored piping systems nuts shall be tightened snug against rod plate to prevent over extension due to pressure thrust created by expansion joint. Refer to "Thrust Factor in Table 2, note 5 in this manual.

Listed below are three (3) control unit configurations supplied by PROCO and are commonly used with rubber expansion joints in piping systems.

Figure 1

Known as a **LIMIT ROD**, this control unit configuration will allow an expansion joint to extend to a predetermined extension setting. Nuts shall be field set to no more than the maximum allowable extension movement of a rubber expansion joint (unless used in an un-anchored system). Refer to Table 2 in this manual for allowable movement capabilities. Spherical washers can also be furnished (upon request) to combat any "nut to plate" binding during offset. ***Consult the systems engineer for proper nut settings prior to system operation.***

Figure 2

Known as a **LIMIT/CONTROL ROD**, this control unit configuration is used to allow specified pipe expansion (expansion joint axial compression) and pipe contraction (expansion joint axial extension) movements. Nuts shall be field set to no more than the maximum allowable extension (unless used in an un-anchored pipe system) or compression of a rubber expansion joint. Refer to Table 2 in this manual for allowable movement capabilities. Internal and external nuts can also be field set to allow for no movement in the horizontal plane. This setting will allow the rubber to move laterally while keeping expansion joint thrust forces low on adjacent equipment. Spherical washers can also be furnished (upon request) to combat any potential "nut to plate" binding during offset. ***Limit/Control rods with internal nuts must be specified at the time of inquiry. Consult the systems engineer for proper nut settings prior to system operation.***

Figure 3

Known as a **COMPRESSION SLEEVE**, this configuration is used to allow for specified pipe expansion (expansion joint axial compression) and pipe contraction (expansion joint extension) movements. Nuts shall be field set to no more than the maximum allowable extension (unless used in an un-anchored pipe system) of a rubber expansion joint. Refer to Table 2 in this manual for allowable movement capabilities. PROCO will manufacture each compression sleeve to allow for no axial movement unless otherwise specified by the purchaser. Compression sleeves shall be field trimmed to meet required allowable axial movement as set forth by system requirements. Spherical washers can also be furnished (upon request) to combat any potential "nut to plate" binding during offset. ***Consult the systems engineer for proper sleeve lengths prior to system operation.***

Important Control Unit Considerations

The number of rods, control rod diameters and control rod plate thicknesses are important considerations when specifying control units for an application. As a minimum, specifying engineers or purchasers shall follow the guidelines as set forth in Appendix C of the Fluid Sealing Association's Technical Handbook, 7.3 Edition. PROCO engineers its control unit assemblies to system requirements. Our designs incorporate an allowable stress of 65% of material yield for each rod and plate (rod and plate material to be specified by purchaser). Therefore, it is important to provide pressure and temperature ratings to PROCO when requesting control units for rubber expansion joints. It is also important to provide adjacent mating flange thickness or mating specifications to ensure correct rod lengths are provided.

Installation Instructions for Control Rods

1. Assemble expansion joint between pipe flanges in its manufactured face-to-face length. Install the retaining rings furnished with the expansion joint.

2. Assemble control rod plates behind pipe flanges as shown. Flange bolts or all thread studs through the control rod plate must be longer to accommodate the plate thickness. Control rod plates should be equally spaced around the flange. Depending upon the size and pressure rating of the system, 2, 3, 4, or more control/limit rods may be required. Refer to Table 4 in this manual or to the Fluid Sealing Association's Technical Handbook, 7.3 Edition, page 23 for control rod pressure ratings.

3. Insert control/limit rods through top plate holes. Steel flat washers are to be positioned at outer plate surface.

4. If a single nut per unit is furnished, position this nut so that there is a gap between the nut and the steel flat washer. This gap is equal to the joints maximum extension (commencing with the nominal face-to-face length). To lock this nut in position, either "stake" the thread in two places or tack weld the nut to the rod. If two nuts are supplied, the nuts will create a "jamming" effect to prevent loosening. (Nuts should be snug against flat washer and control rod plate when piping system is un-anchored.)

Note: Consult the manufacturer if there are any questions as to the rated compression and elongation. These two dimensions are critical in setting the nuts and sizing the compression pipe sleeve (if supplied).

5. If there is a requirement for compression pipe sleeves, ordinary pipe may be used, sized in length to allow the joint to be compressed to its normal limit.

6. If there is a requirement for optional spherical washers, these washers are to be positioned at outer plate surface and backed up by movable double nuts.

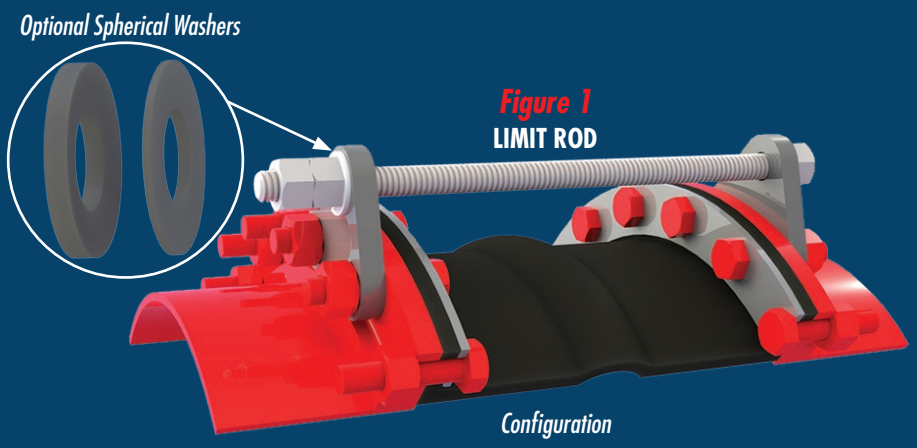

Figure 1
LIMIT ROD

Configuration

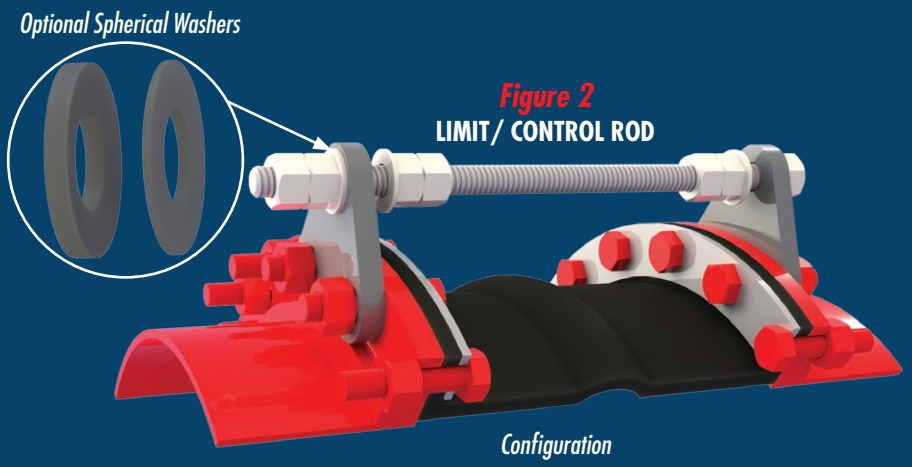

Figure 2
LIMIT/ CONTROL ROD

Configuration

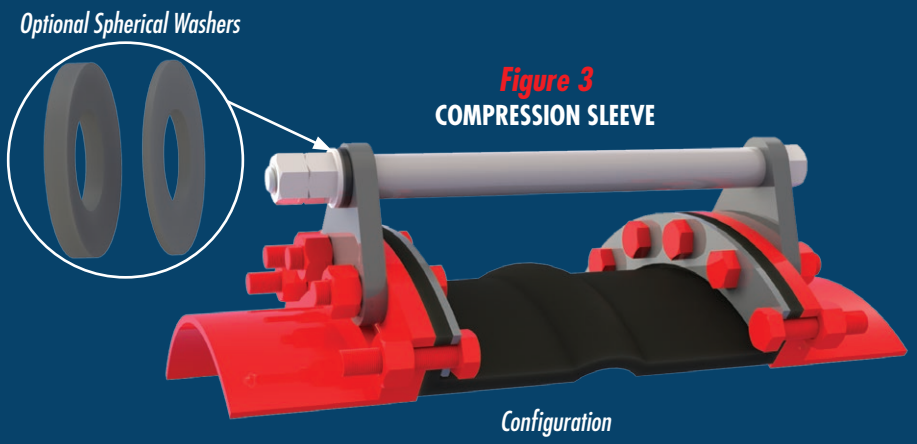

Figure 3
COMPRESSION SLEEVE

Configuration

Table 4		Maximum Surge or Test Pressure of the Systems			
Nominal Pipe Size Expansion Joint I.D. Inch /(mm)		Number of Control Rods Recommended			
		2	4	6	8
2	(50)	661	•	•	•
2.5	(65)	529	•	•	•
3	(75)	441	•	•	•
4	(100)	311	622	•	•
5	(125)	235	470	•	•
6	(150)	186	371	•	•
8	(200)	163	326	•	•
10	(250)	163	325	488	•
12	(300)	160	320	481	•
14	(350)	112	223	335	•
16	(400)	113	227	340	453
18	(450)	94	187	281	375
20	(500)	79	158	236	315
22	(550)	85	171	256	342
24	(600)	•	147	221	294
26	(650)	•	124	186	248
28	(700)	•	130	195	261
30	(750)	•	141	211	281
32	(800)	•	125	188	251
34	(850)	•	143	215	286
36	(900)	•	138	207	276
38	(950)	•	125	188	251
40	(1000)	•	85	127	169
42	(1050)	•	96	144	192
44	(1100)	•	88	133	177
46	(1150)	•	82	122	163
48	(1200)	•	81	121	161

Notes:
1. Pressures listed above do not relate to the actual design pressure of the expansion joint products, but are the maximum surge or pressure for a specific control rod nominal pipe size.

Installation Instructions for Non-Metallic Expansion Joints

1. Service Conditions:

Make sure the expansion joint rating for temperature, pressure, vacuum and movements match the system requirements. Contact the manufacturer for advice if the system requirements exceed those of the expansion joint selected. Check to make sure the elastomer selected is chemically compatible with the process fluid or gas.

2. Alignment:

Expansion joints are normally not designed to make up for piping misalignment errors. Piping should be lined up within 1/8". Misalignment reduces the rated movements of the expansion joint and can induce severe stress and reduce service life. Pipe guides should be installed to keep the pipe aligned and to prevent undue displacement.

3. Anchoring:

Solid anchoring is required wherever the pipeline changes direction and expansion joints should be located as close as possible to anchor points. If piping is not adequately anchored, control rods should be used. If anchors are not used, pressure thrust may cause excessive movement damaging the expansion joint.

4. Pipe Support:

Piping must be supported by hangers or anchors so expansion joints do not carry any pipe weight.

5. Mating Flanges:

Install the expansion joint against the mating pipe flanges and install bolts so that the bolt head and washer are against the retaining rings. If washers are not used, flange leakage can result – particularly at the split in the retaining rings. Flange-to-flange dimension of the expansion joint must match the breech opening. Make sure the mating flanges are clean and are flat faced type or no more than 1/16" raised face type. Never install expansion joints that utilize split retaining rings next to wafer type check or butterfly valves. Serious damage can result to a rubber joint of this type unless installed against full face flanges.

6. Bolting Torque:

Table 5 shows the recommended torque ranges for non-metallic expansion joints with full-faced rubber flanges: Torque specifications are approximate. Tighten bolts in stages using cross-bolt tightening pattern. If the joint has integral fabric and rubber flanges, the bolts should be tight enough to make the rubber flange OD bulge between the retaining rings and the mating flange. After installation, the system should be pressurized and examined to confirm a proper seal. Torque bolts sufficiently to assure leak free operation at hydrostatic test pressure. Note: Torque values are approximate due to mating flange surfaces, installation offsets, operating pressures and environmental conditions.

Table 5 Size	Approximate Torque Values
1" THRU 2"	20 - 40 ft/lbs
2.5" THRU 5"	25 - 60 ft/lbs
6" THRU 12"	35 - 140 ft/lbs
14" THRU 18"	50 - 180 ft/lbs
20" THRU 24"	60 - 200 ft/lbs
26" THRU 40"	70 - 300 ft/lbs
42" THRU 48"	80 - 300 ft/lbs

7. Storage:

Ideal storage is in a warehouse with a relatively dry, cool location. Store flanges face down on a pallet or wooden platform. Do not store other heavy items on top of expansion joints. Ten year shelf life can be expected with ideal conditions. If storage must be outdoors, place on wooden platform and joints should not be in contact with the ground. Cover with a tarpaulin.

8. Large Joint Handling:

Do not lift with ropes or bars through the bolt holes. If lifting through the bore, use padding or a saddle to distribute the weight. Make sure cables or forklift tines do not contact the rubber. Do not let expansion joints sit vertically on the edges of the flanges for any period of time.

9. Additional Tips:

A. Do not insulate over a non-metallic expansion joint; however, if insulation is required, it should be made removable to permit easy access to the flanges. This facilitates periodic inspection of the tightness of the joint bolting.
B. It is acceptable (but not necessary) to lubricate the expansion joint flanges with a thin film of graphite dispersed in glycerin or water to ease disassembly at a later time.
C. Do not weld in the near vicinity of a non-metallic joint.
D. If expansion joints are to be installed underground, or will be submerged in water, contact manufacturer for specific recommendations.
E. If the expansion joint will be installed outdoors, make sure the cover material will withstand ozone, sunlight, etc.
F. Check the tightness of lead-free flanges two or three weeks after installation and retighten if necessary.

Warning: Expansion joints may operate in pipelines or equipment carrying fluids and/or gasses at elevated temperature and pressures and may transport hazardous materials. Precautions should be taken to protect personnel in the event of leakage or splash. Rubber joints should not be installed in areas where inspection is impossible. Make sure proper drainage is available in the event of leakage when operating personnel are not available.

Piping System Layout Examples

Anchored System

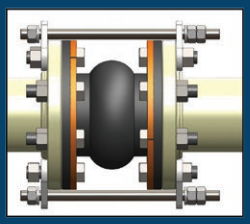

Figure 1

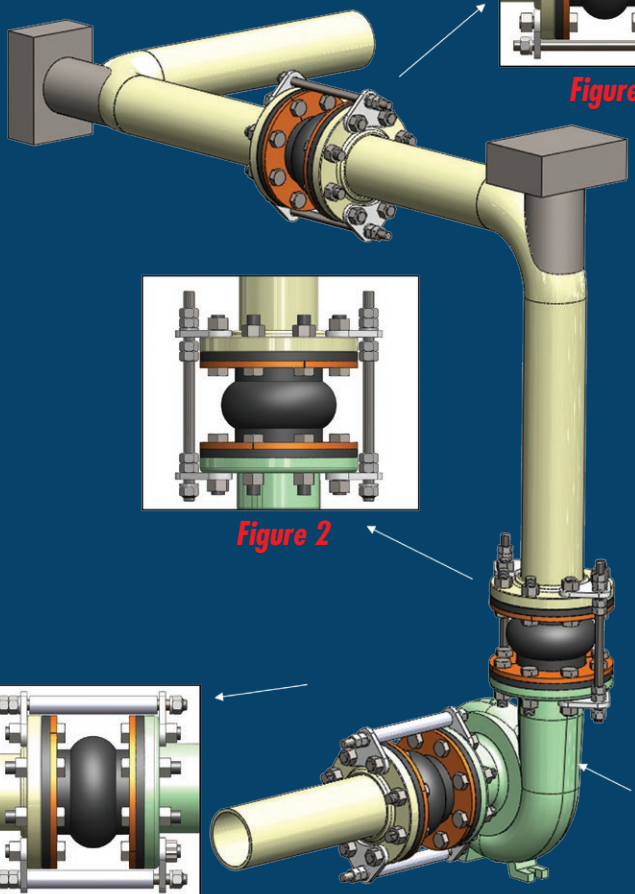

Figure 2

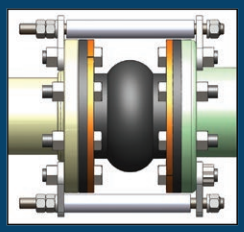

Figure 3

Anchored System Note:

Although limit rods, control rods or limit rods with compression sleeves are not required in an anchored pipe system, you may want to consider using them. If an anchor were to fail, any rod configuration would be capable of handling the pressure thrust of the system and lessen the likelihood of an expansion joint failure.

Un-Anchored System

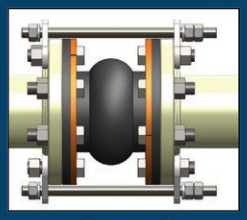

Figure 1

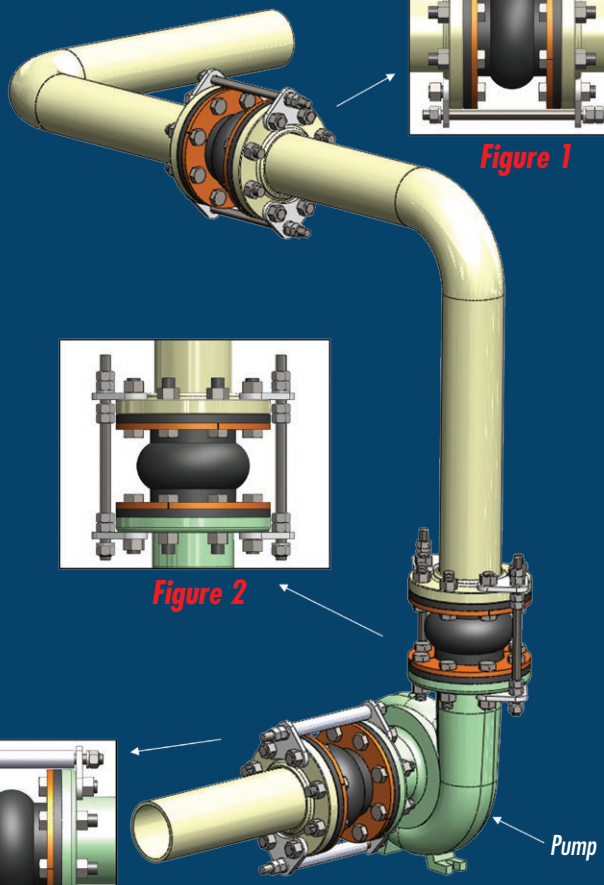

Figure 2

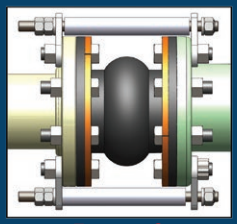

Figure 3

Un-Anchored System Note:

Rod sets should be installed so that external nuts are snug against the plate at installation. Pressure thrust of the pipe system can cause expansion joint to over-elongate and reduce movement capabilities.

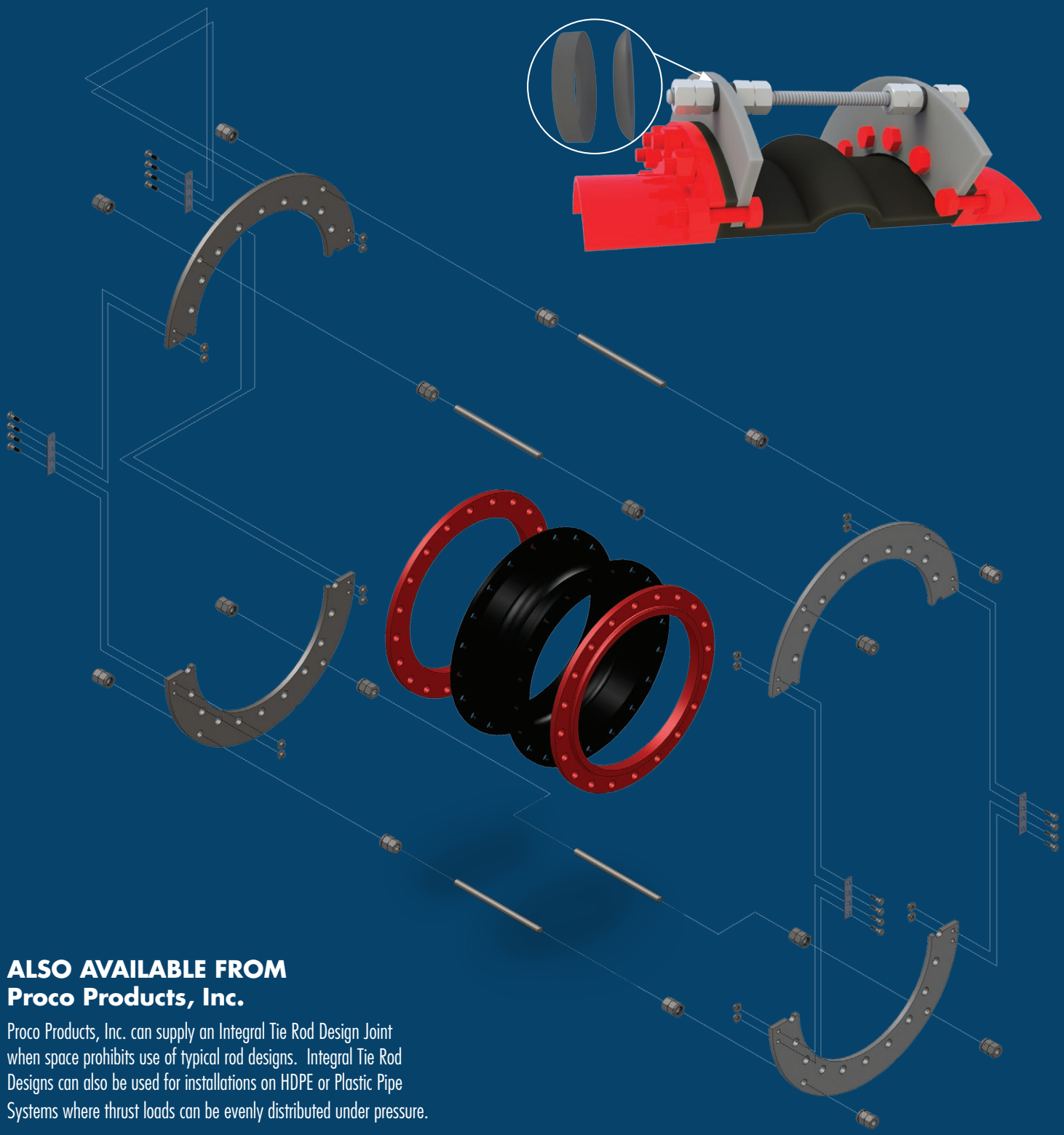

ALSO AVAILABLE FROM
Proco Products, Inc.

Proco Products, Inc. can supply an Integral Tie Rod Design Joint when space prohibits use of typical rod designs. Integral Tie Rod Designs can also be used for installations on HDPE or Plastic Pipe Systems where thrust loads can be evenly distributed under pressure.

PROCO
PROCO PRODUCTS, INC.

2431 North Wigwam Dr. (95205)
P.O. Box 590 • Stockton, CA
95201-0590 • USA

Toll-Free Phone: (800) 344-3246
Facsimile: (209) 943-0242
(209) 943-6088
email: sales@procoproducts.com
website: http://www.procoproducts.com

NATIONWIDE AND CANADA
INTERNATIONAL

American Water Works Association

IDCO Industrial Distributor Co-op

NAHAD Charter Listed Member
SAFETY • QUALITY • RELIABILITY

Fluid Sealing Association FSA

Water Environment Federation®
Preserving & Enhancing the Global Water Environment
MEMBER

REPRESENTED BY:

Produced 9/14